A Suggested Layout Wiring Diagram for CMRI Systems

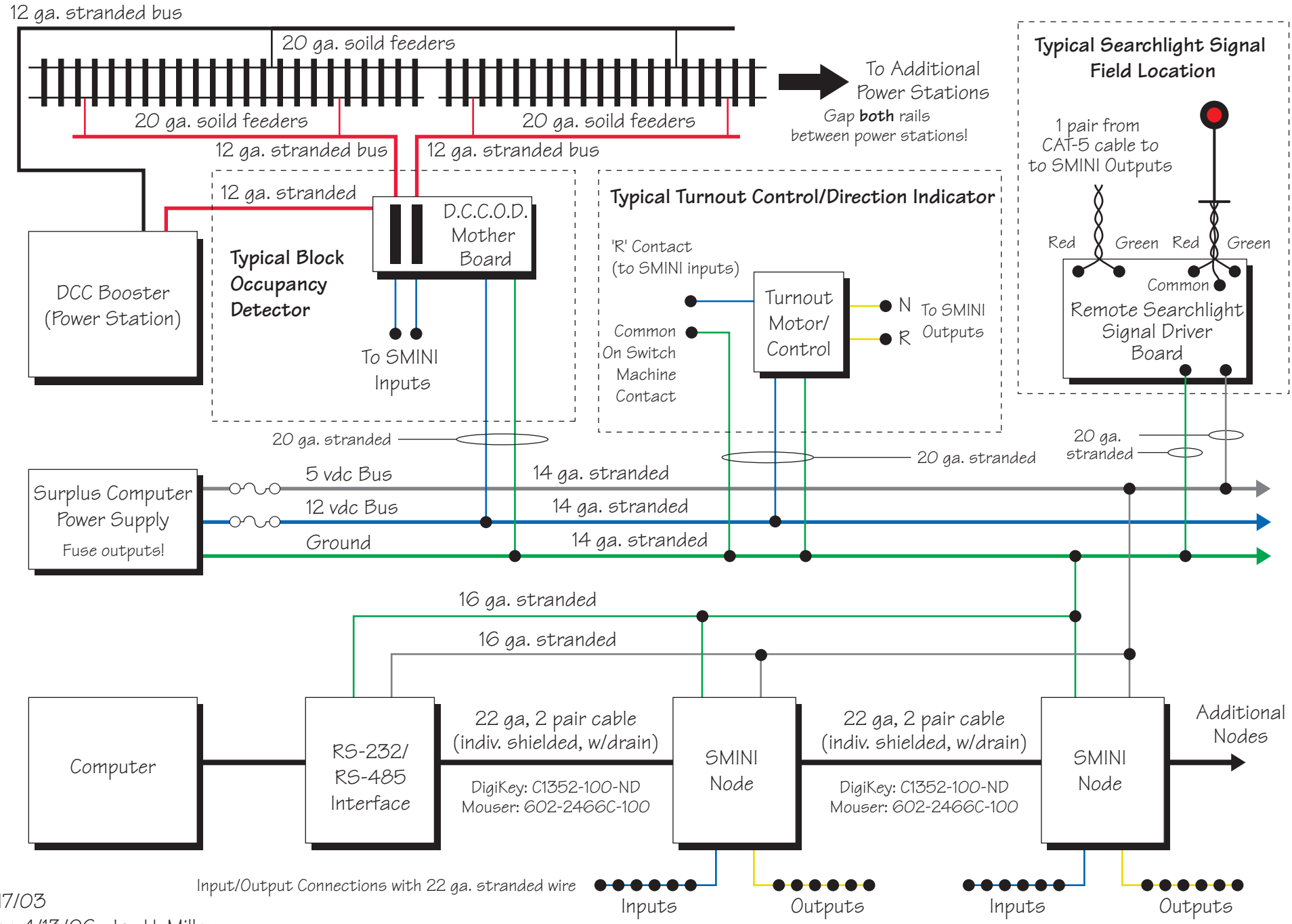

1/17/03
Rev: 4/13/06 Jay H. Miller